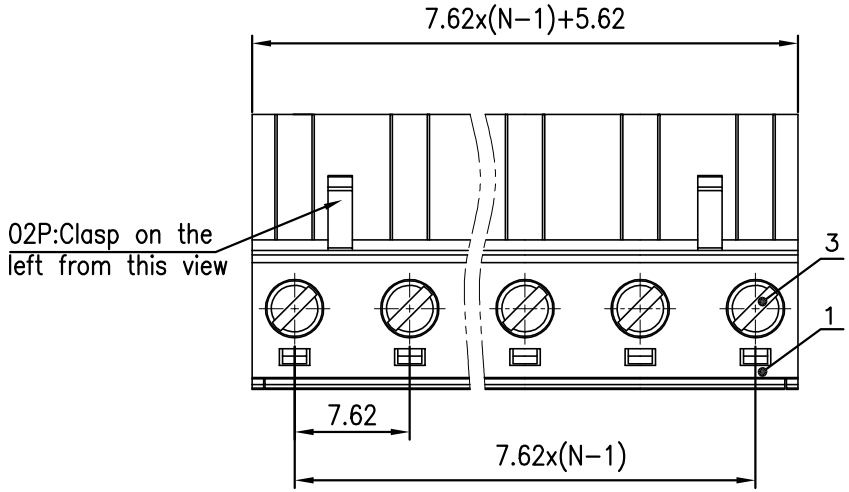

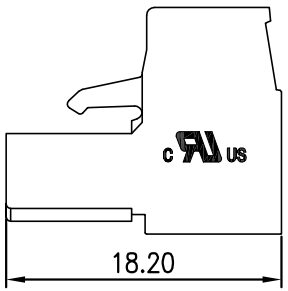

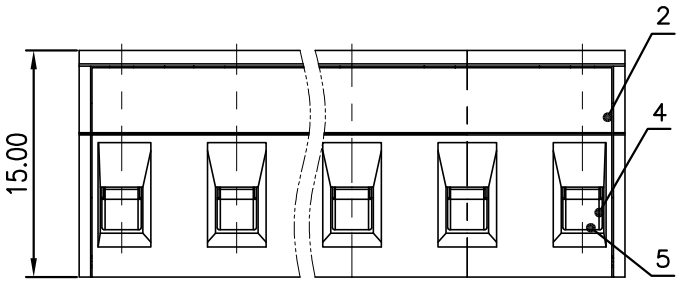

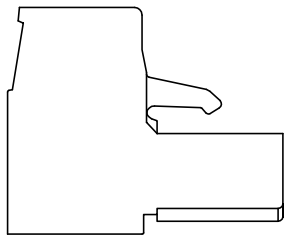

ITEM	NAME OF PART	MATERIAL	NOTES
5	Clamp	Copper alloy	Sn Plated
4	Cage	Copper alloy	M3/Ni Plated
3	Screw	Steel	M3/Zn Plated
2	Cover	PA66	UL94V−0
1	Housing	PA66	UL94V−0

UL 标准/UL Standard:	B	C	D
额定电压/电流/Rated Voltage(V)/Current(A)	300/15	/	300/10
IEC 标准/IEC Standard:			
过压类别/Overvoltage Category/污染等级/Pollution Degree	Ⅲ/2		
额定电压/电流/Rated Voltage(V)/Current(A)	400/20		
额定脉冲电压(KV)/Rate Impulse Voltage(KV)	4.0		
螺丝扭矩/Torque Tightening(N·m/Lb.in)	M3 0.5/4.43		
线径范围(硬线和软线)/Wire Range(rigid and flexible)(mm^2/AWG)	1.0~2.5/28~12		
间距/Pitch(mm)/线数范围/Poles	7.62/N=02~16P		
剥线长度/Stripping length(mm)	7−8		
使用温度范围/Operating temperature(°C)	−40~+105		
符合RoHS环保要求/Conform to RoHS	Yes		
标准颜色编号/Standard color number: PANTONE / RAL	/		

未注公差/General tolerances(mm)														
0~3	>3~6	>6~10	>10~18	>18~30	>30~50	>50~80	>80~120	>120~180	>180~250	>250~315	>315~400	>400~500	>500	0.1/10
±0.12	±0.18	±0.22	±0.26	±0.31	±0.37	±0.57	±0.80	±0.93	±1.05	±1.15	±1.60	±2.20	±2.50	∠ ±2°

MATERIAL:	SURFACE:		
MAT NO.:	® 宁波三安电子科技有限公司 Sanan Electrical Technology Co.Ltd		
STATUS:			
APPD:	NAME: 2ESAK−7.62−XXP−1Y−1000A(H)		
CHKD:			
DRFT:	DRAWING NO.:	REV	
SIZE: A4 mm (inch)	TYPE:	SCALE:	SHEET 1/1